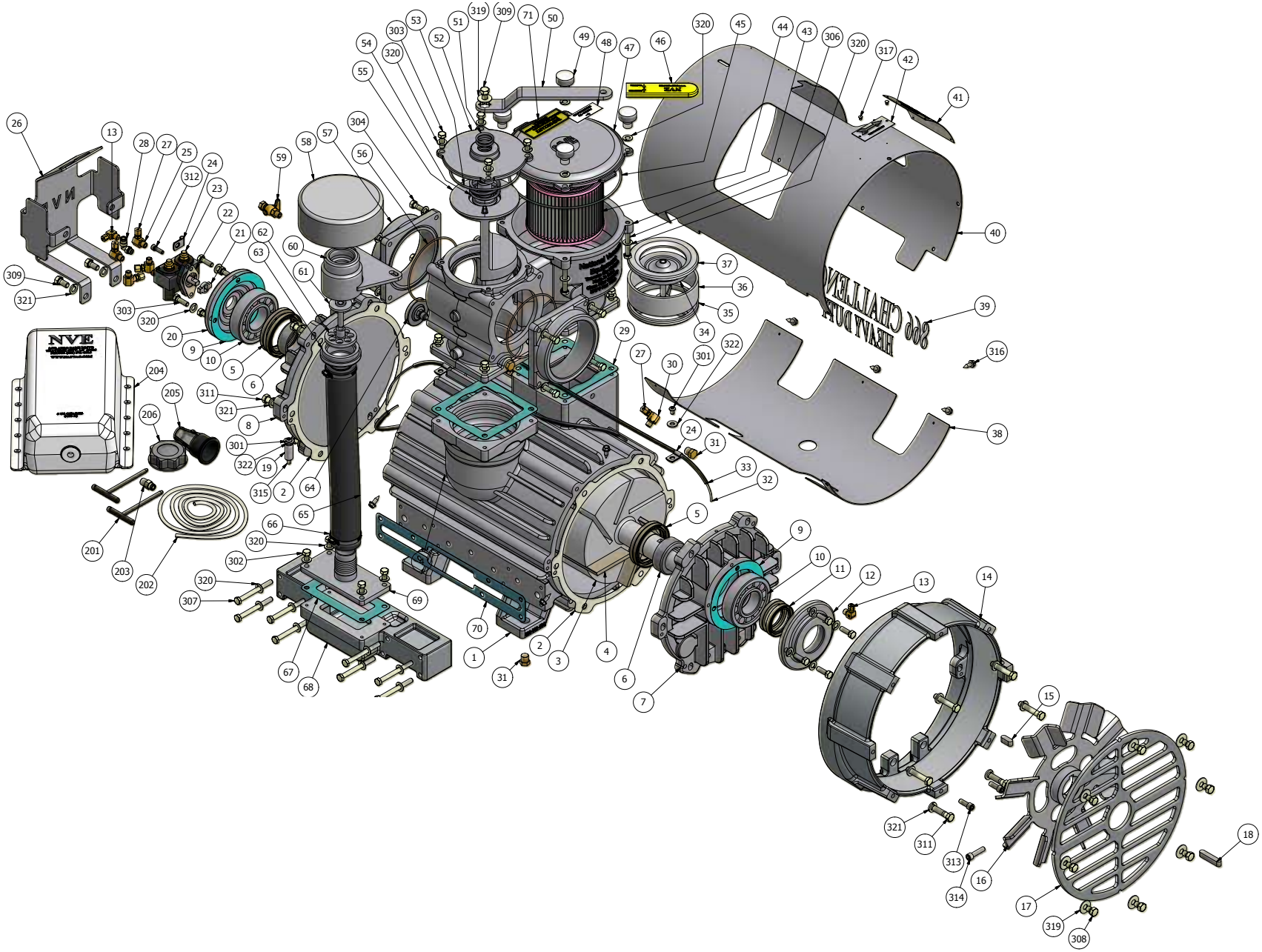866 Challenger™ - Fan Cooled Parts Diagram