Chandler Equipment, Inc.

TOLL FREE 1-800-342-0887 • FAX 1-888-645-9700

JUROP *PN23/33* PARTS LAYOUT

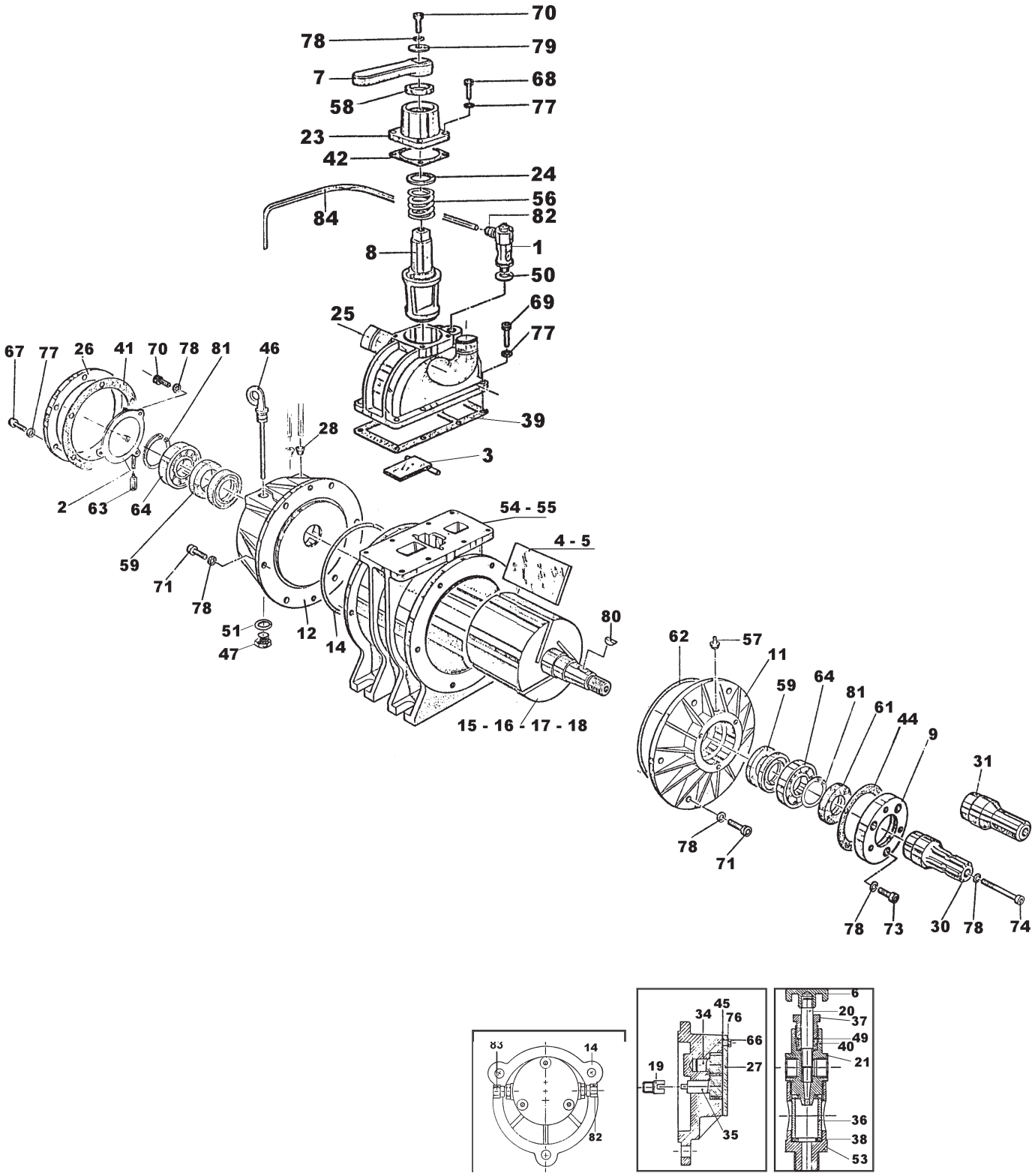

Chandler Equipment, Inc.

TOLL FREE 1-800-342-0887 • FAX 1-888-645-9700

JUROP *PN23/33* PARTS LIST

POS.	PART#	DESCRIPTION
1	1401200400	OILER FOR PN23 - PN33
2	1407200500	OIL PUMP FOR PN23 -PN33
3	1593600100	FLAPPER VALVE FOR PN23 - PN33
4	1601600000	VANE PN23 (3 REQUIRED)
5	1601600200	VANE PN33 (3 REQUIRED)
6	1605200000	REGULATOR NUT FOR OILER
7	1605500000	HANDLE FOR VALVE STEM
8	1608501300	VALVE COCK FOR PN23-PN33
9	1610500900	END CAP PN23-PN33
10	1610503900	END PLATE 540 RPM FOR PN23-PN33
11	1610504000	END PLATE FOR PN23-PN33
12	1612501200	OIL RESERVOIR PN23-PN33
13	1612501300	COVER 540RPM PN23-PN33
14	1613500100	OIL PUMP HOUSING
15	1621501600	ROTOR PN23 CW ROTATION
16	1621501700	ROTOR PN33 CW ROTATION
17	1621502600	ROTOR PN23 CCW ROTATION
18	1621502700	ROTOR PN33 CCW ROTATION
19	1622002600	OIL PUMP PIVOT
20	1622200200	PIVOT FOR OILER
21	1623200000	OILER HEAD
22	1623200100	OILER HEAD FOR SINGLE OILER
23	1623500500	VALVE STEM HOUSING PN23-PN33
24	1624000000	WASHER
25	1627501600	VALVE HOUSING PN23-PN33
26	1640100000	COVER FOR RESERVOIR PN23-PN33
27	1640200000	END PLATE FOR OIL PUMP
28	1642600000	OIL LINE RUBBER GASKET
29	1642600100	PTO SHIELD
30	1650000400	1 3/8" SPLINE SHAFT PN23-PN33
31	1650000500	1 3/8" SMOOTH SHAFT PN23-PN33
32	1651000200	PINION GEAR 540 RPM PN23-PN33
33	1651000300	DRIVE GEAR 540 RPM PN23-PN33
34	1651001300	COMPANION GEAR FOR OIL PUMP
35	1651001400	DRIVE GEAR FOR OIL PUMP
36	1663600100	SIGHT GLASS FOR OILER
37	1670200100	LOCKING NUT FOR OILER
38	1680600000	GASKET FOR OILER
39	1680600400	GASKET FOR VALVE HOUSING
40	1680603500	GASKET FOR DRIP OILER STEM
41	1680700300	COVER GASKET FOR RESERVOIR
42	1680700800	GASKET FOR VALVE STEM HOUSING
43	1680700900	GASKET FOR 540 RPM PN23-PN33
44	1680701000	GASKET FOR END CAP
45	1680702900	END PLATE GASKET FOR OIL PUMP
46	1683600100	DIP STICK PN23-PN33
47	1684000000	3/8" DRAIN PLUG
48	1684000100	VENT PLUG
49	1685001500	WASHER FOR OILER
50	1685100000	WASHER FOR OILER
51	1685100200	WASHER FOR DRAIN PLUG
52	1685100800	WASHER
53	1687200100	OILER BODY
54	1687502600	PUMP HOUSING PN23
55	1687502700	PUMP HOUSING PN33
56	1691000200	VALVE SPRING PN23-PN33

POS.	PART#	DESCRIPTION
57	4022100010	GREASE FITTING
58	4022200005	SEAL FOR VALVE STEM
59	4022200025	SEAL FOR RESERVOIR & END PLATE
60	4022200032	SHAFT SEAL
61	4022200037	SHAFT SEAL
62	4022200230	O-RING FOR END PLATE PN23-PN33
63	4022300001	FILTER FOR OIL PUMP
64	4023100010	BEARING FOR RESERVOIR & END PLATE
65	4023100120	BEARING
66	4026100204	BOLT 5X16MM FOR OIL PUMP
67	4026100304	BOLT 6X16MM
68	4026100306	BOLT 6X20MM
69	4026100307	BOLT 6X25MM
70	4026100408	BOLT 8X20MM
71	4026100410	BOLT 8X25MM
72	4026101403	BOLT 8X20MM
73	4026120405	ALLEN HEAD BOLT 8X25MM
74	4026120415	BOLT 8X90MM FOR SHAFT
75	4026305612	LOCK NUT 20X1.5
76	4026350907	WASHER FOR OIL PUMP
77	4026350908	WASHER 6.4MM
78	4026350909	WASHER 8.4MM
79	4026356004	WASHER 8MM
80	4026500018	WOODRUFF KEY
81	4026510025	SNAP RING PN23-PN33
82	4026702000	OIL LINE FITTING 4X1/8"
83	4026702004	OIL LINE FITTING
84	4033320002	OIL LINE (PER FIVE FOOT)